CNC Procedure 2016_033

Nov 2nd

2016

Procedure for handling KTY84-130 thermistor

[Applicable for all Models of α-iA Spindle Amplifiers]

General description on KTY84 → Silicon based Temperature Sensor

The temperature sensors in the KTY84 series have a positive temperature coefficient of resistance and are suitable for use in measurement and control systems. The sensors are encapsulated in the SOD68 (DO-34) package.
This device is sensitive to Electrostatic Discharge (ESD). Therefore care should be taken during transport and handling

Advantages of using KTY84 temperature sensors:

- High accuracy and reliability
- Long-term stability
- Positive temperature coefficient; fail-safe behaviour
- Virtually linear characteristics
- Temperature range -40 ºC to +300 ºC
- Nickel plated leads

Symbol	Parameter	Conditions	Min	Typ	Max	Unit
R_{100}	sensor resistance	Isen(cont) = 2 mA				
		KTY84/130	970		1030	Ω

[1] The thermal time constant is the time taken for the sensor to reach 63.2 % of the total temperature difference. For example, if a sensor with a temperature of 25 ºC is moved to an environment with an ambient temperature of 100 ºC, the time for the sensor to reach a temperature of 72.4 ºC is the thermal time constant.

Symbol	Parameter	Conditions	Min	Typ	Max	Unit
R_{100}	sensor resistance	$I_{sen(cont)}$ = 2 mA				
		KTY84/130	970	-	1030	Ω
		KTY84/150	950	-	1050	Ω
		KTY84/151	950	-	1000	Ω
TC	temperature coefficient		-	0.61	-	%/K
R_{250}/R_1	resistance ratio	T_{amb} = 250 □C and	2.111	2.166	2.221	
R_{25}/R_{100}	resistance ratio	T_{amb} = 25 □C and 100	0.595	0.603	0.611	
□th thermal time constant in still air [1] -				20	-	s
in still liquid [1] -				1	-	s
in flowing liquid [1] -				0.5	-	s

Output of KTY84 Sensor

Ambient temperature, corresponding resistance, temperature coefficient and maximum expected temperature error for KTY84/130 are listed as below:

Ambient Temperature		Temperature coefficient (%/K)	Resistance (Ω)			Temperature error (K)
(°C)	(°F)		Min	Typ	Max	
–40	–40	0.84	340	359	379	±6.48
–30	–22	0.83	370	391	411	±6.36
–20	–4	0.82	403	424	446	±6.26
–10	14	0.80	437	460	483	±6.16
0	32	0.79	474	498	522	±6.07
10	50	0.77	514	538	563	±5.98
20	68	0.75	555	581	607	±5.89
25	77	0.74	577	603	629	±5.84
30	86	0.73	599	626	652	±5.79
40	104	0.71	645	672	700	±5.69
50	122	0.70	694	722	750	±5.59
60	140	0.68	744	773	801	±5.47
70	158	0.66	797	826	855	±5.34
80	176	0.64	852	882	912	±5.21
90	194	0.63	910	940	970	±5.06
100	212	0.61	970	1000	1030	±4.9
110	230	0.60	1029	1062	1096	±5.31
120	248	0.58	1089	1127	1164	±5.73
130	266	0.57	1152	1194	1235	±6.17
140	284	0.55	1216	1262	1309	±6.63
150	302	0.54	1282	1334	1385	±7.1
160	320	0.53	1350	1407	1463	±7.59
170	338	0.52	1420	1482	1544	±8.1
180	356	0.51	1492	1560	1628	±8.62
190	374	0.49	1566	1640	1714	±9.15
200	392	0.48	1641	1722	1803	±9.71
210	410	0.47	1719	1807	1894	±10.28
220	428	0.46	1798	1893	1988	±10.87
230	446	0.45	1879	1982	2085	±11.47
240	464	0.44	1962	2073	2184	±12.09
250	482	0.44	2046	2166	2286	±12.73
260	500	0.42	2132	2261	2390	±13.44
270	518	0.41	2219	2357	2496	±14.44
280	536	0.38	2304	2452	2600	±15.94
290	554	0.34	2384	2542	2700	±18.26
300	572	0.29	2456	2624	2791	±22.12

Function for using KTY84-130 thermistor in FANUC Controller:

(1) Overview

The function to calculate motor temperature by using KTY84-130 thermistor is added. This manual describes the method for using KTY84-130 thermistor as motor temperature sensor.

(2) Applied Spindle Amplifier Module

Specification number:

A06B-6111-Hxxx#H570

A06B-6112-Hxxx#H570

A06B-6121-Hyyy#H570

A06B-6122-Hyyy#H570

xxx: 002-055, yyy: 006-100

#H570: α*i* series spindle software 9D70 series edition Z1.

Note:

Before August 2003, It is necessary to apply modification (A06B-6111-J409) to SPM

(3) Parameters

30*i*	
4134	Motor overheat detect level

Unit of data: 1 deg C Valid

data range: 0, 90 to 180

Standard setting: depend on motor model (temperature sensor) Set '0' for using thermostat.

Set overheat detect level (between 90 and 180) for using thermistor.

30*i*	#	#	#5	#4	#	#2	#1	#0
4397				**THTYP**				

THTYP Thermistor type

0 : FANUC standard sensor (Shibaura)

1 : KTY84-130 (Philips)

Note:

1. If you make a wrong setting, there is a risk to fail alarm detection related to temperature sensor.
2. Fanuc currently cannot fully guarantee the detected value of temperature in case of using KTY84-130.

Parameter Setting limits for thermal sensor to detect motor Over heat:

Kind of sensor	Thermal sensor type selection No.4397 #4	Setting for motor overheat level No.4134
Thermostat	0	0
FANUC standard thermistor	0	≠0 (90 to 180 degree C)
KTY84-130 (Philips) (Note3)	1	≠0 (90 to 180 degree C)

(Note3) βiSVSP series is non-compliant.

(4) Connection

Built-in motor using BZi sensor.

Please refer to B-65282EN Chapter 9 of Cable K17 for the detail of connectors.

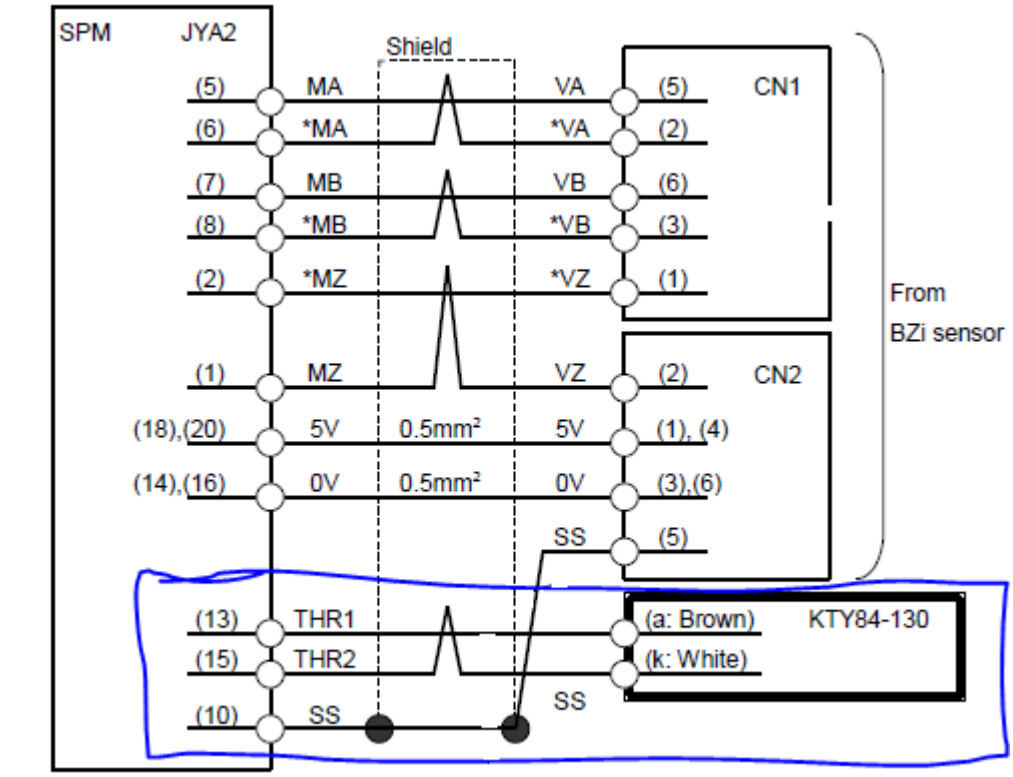
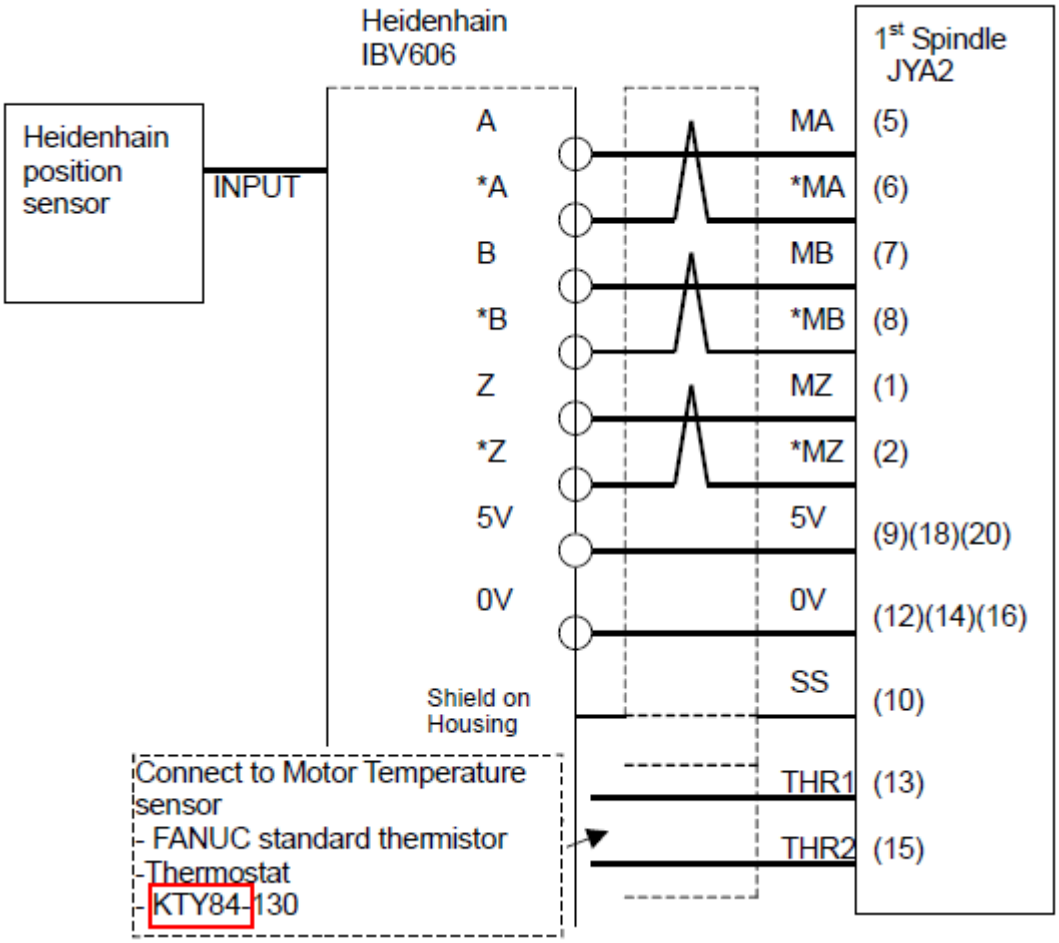
Built-in motor using 3rd party feedback sensor.